TOLERANCE UNLESS OTHERWISE SPEC.			
	Metal	Plastic	PCB
0~20	±0.10	±0.10	±0.10
20~99	±0.15	±0.15	±0.15
100~199	±0.20	±0.25	±0.20
200~~~~	±0.25	±0.30	±0.25

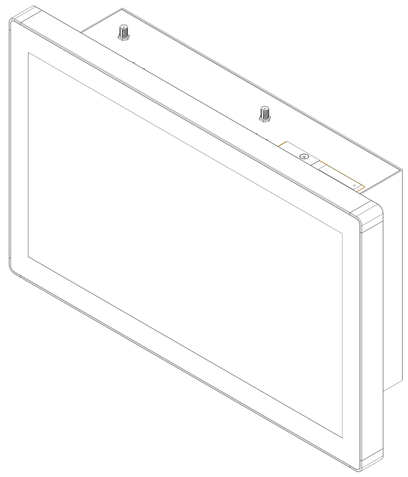

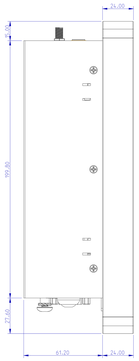

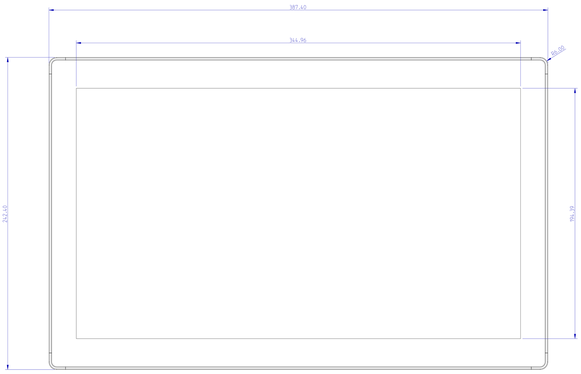

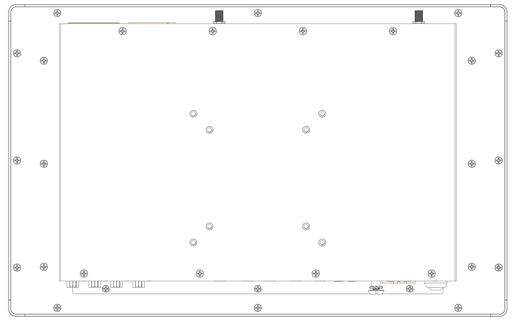

REV.	DATE	DESCRIPTION	CHANGE BY	APPROVAL BY	REMARK

MATERIAL	---			FINISH	---
RoHS COMPLIANT		SCALE	1 : 000	UNIT mm	SHEET 1 of 1
SIGNATURE	DATE	DRAWING NAME	OUTLINE DIMENSION		
DRAW Teddy	07-Apr-24				
CHECK -----	00-000-00	PRODUCT NAME	LPC-P156W-1E		
APPRO. -----	00-000-00				
				PART NO.	
				PERSPECTIVE	THIRD ANGLE

EXGENS
EXGENS CO., LTD. | www.exgens.com.tw