TOLERANCE UNLESS OTHERWISE SPEC.			
	Metal	Plastic	PCB
0 ~ 20	±0.10	±0.10	±0.10
20 ~ 99	±0.15	±0.15	±0.15
100 ~ 199	±0.20	±0.25	±0.20
200 ~ ~ ~	±0.25	±0.30	±0.25

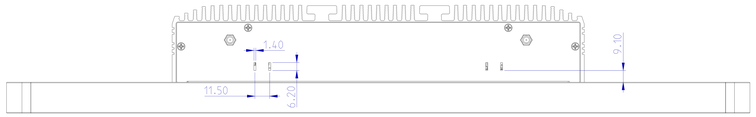

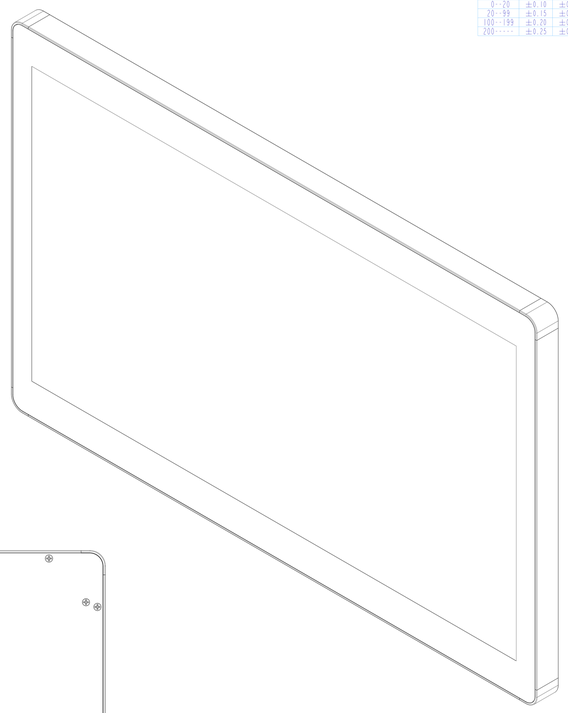

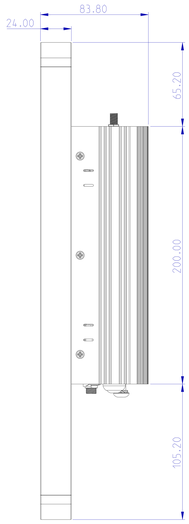

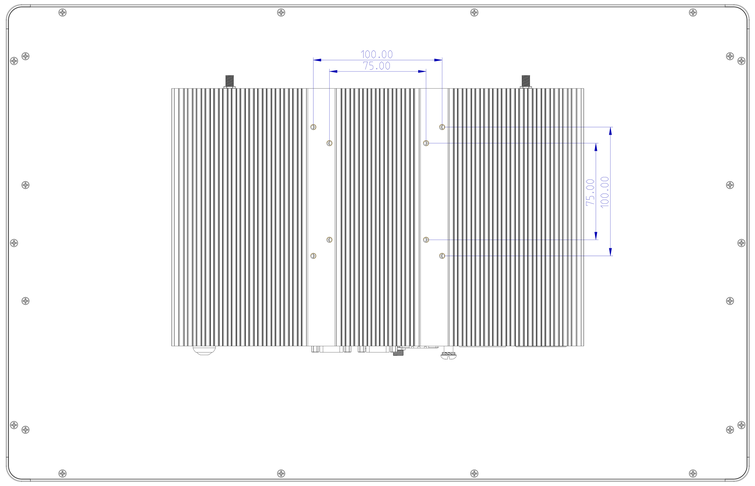

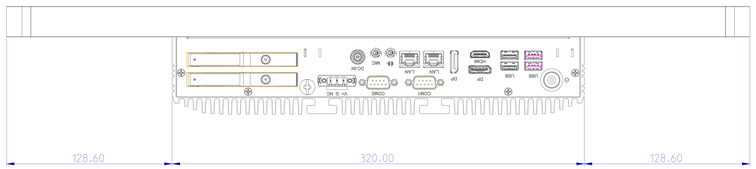

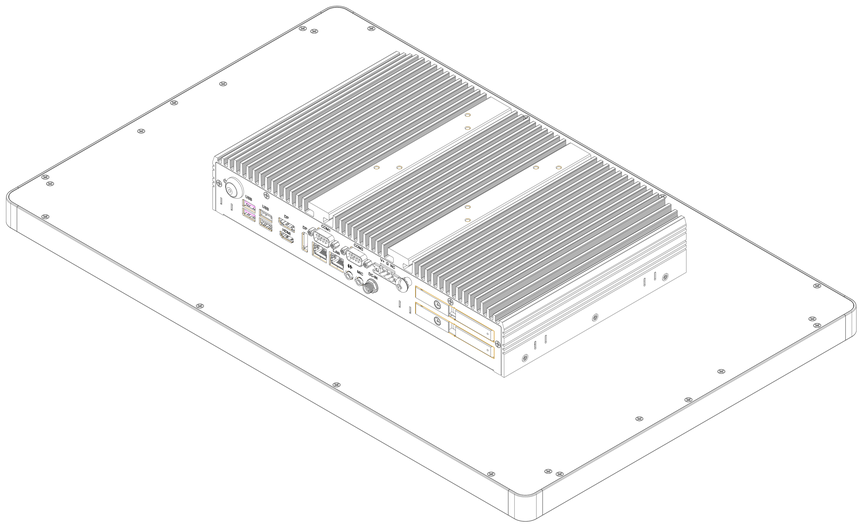

REV.	DATE	DESCRIPTION	CHANGE BY	APPROVAL BY	REMARK

MATERIAL				FINISH	
RoHS COMPLIANT		SCALE : 1.000		UNIT : mm	SHEET 1 of 1
	SIGNATURE	DATE	DRAWING NAME :		
DRAW	Freddy	23-Mar-24		DATE/INE	
CHECK		00-000-00	PRODUCT NAME :		
APPRO.		00-000-00		LPC-P240WAG-2KWFH	
ELGENS				PART NO.	- - -
ELGENS CO., LTD ▸ www.elgens.com.tw				PERSPECTIVE	THIRD ANGLE / A3H